Europe: +49 / 7731 8399 0 | Email: info@standexmeder.com
USA: +1 / 508 295 0771 | Email: salesusa@standexmeder.com
Asia: +852 / 2955 1682 | Email: salesasia@standexmeder.com

Item No.:
2119401530
Item:
KSK-1C90U-1530

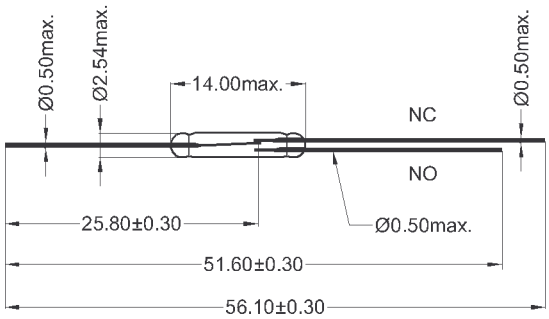

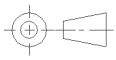

Magnetic properties	Conditions	Min	Typ	Max	Unit
Pull-In excitation (Reference value)	Reed switch unmodified measured in coil- "define operation"	15		30	AT
Test-Coil	Reed switch unmodified	KMS-01			

Contact data 90	Conditions	Min	Typ	Max	Unit
Contact-No.		90			
Contact-form		Form C			
Contact-material		Rhodium			
Contact rating	Any DC combination of V & A not to exceed their individual max.'s			20	W
Switching voltage	DC or Peak AC/ with 40% overdrive			175	V
Switching current	DC or Peak AC/with 40% overdrive			0.5	A
Carry current	DC or Peak AC/ with 40% overdrive			1	A
Contact resistance static	Measured with 40% overdrive Start Value			150	mOhm
Insulation resistance	RH <45 %, 100 V test voltage	1			GOhm
Breakdown voltage	according to IEC 255-5	200			VDC
Operate time, incl. bounce	measured with 40% overdrive			0.7	ms
Release time	measured with no coil excitation			1.5	ms
Capacity	@ 10 kHz across open switch		1		pF

Environmental data	Conditions	Min	Typ	Max	Unit
Shock	1/2 sine wave duration 11ms			50	g
Vibration	from 10 - 2000 Hz			20	g
Ambient temperature		-20		130	°C
Storage temperature		-55		130	°C
Soldering temperature	wave soldering max. 5 sec.				